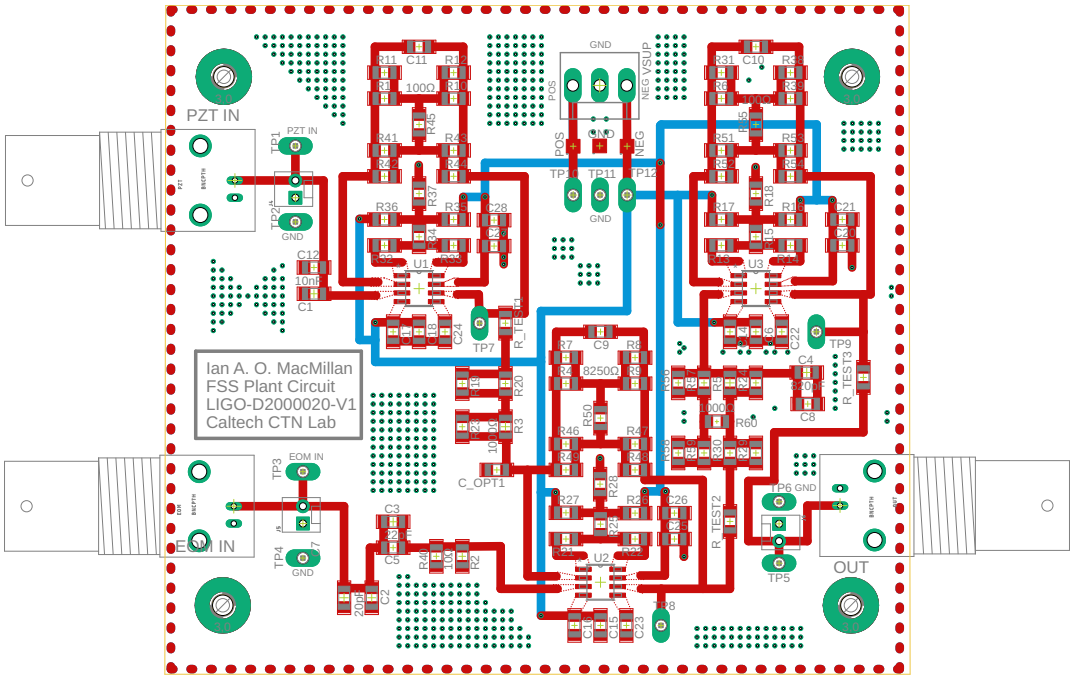
PZT IN
EOM IN
OUT
Ian A. O. MacMillan
FSS Plant Circuit
LIGO-D2000020-V1
Caltech CTN Lab
GND
POS
NEG VSUP
NEG
TP1
TP2
TP3
TP4
TP5
TP6
TP7
TP8
TP9
TP10
TP11
TP12
U1
U2
U3
C_OPT1
R_TEST1
R_TEST2
R_TEST3
8250Ω
100Ω
10nF
20pF