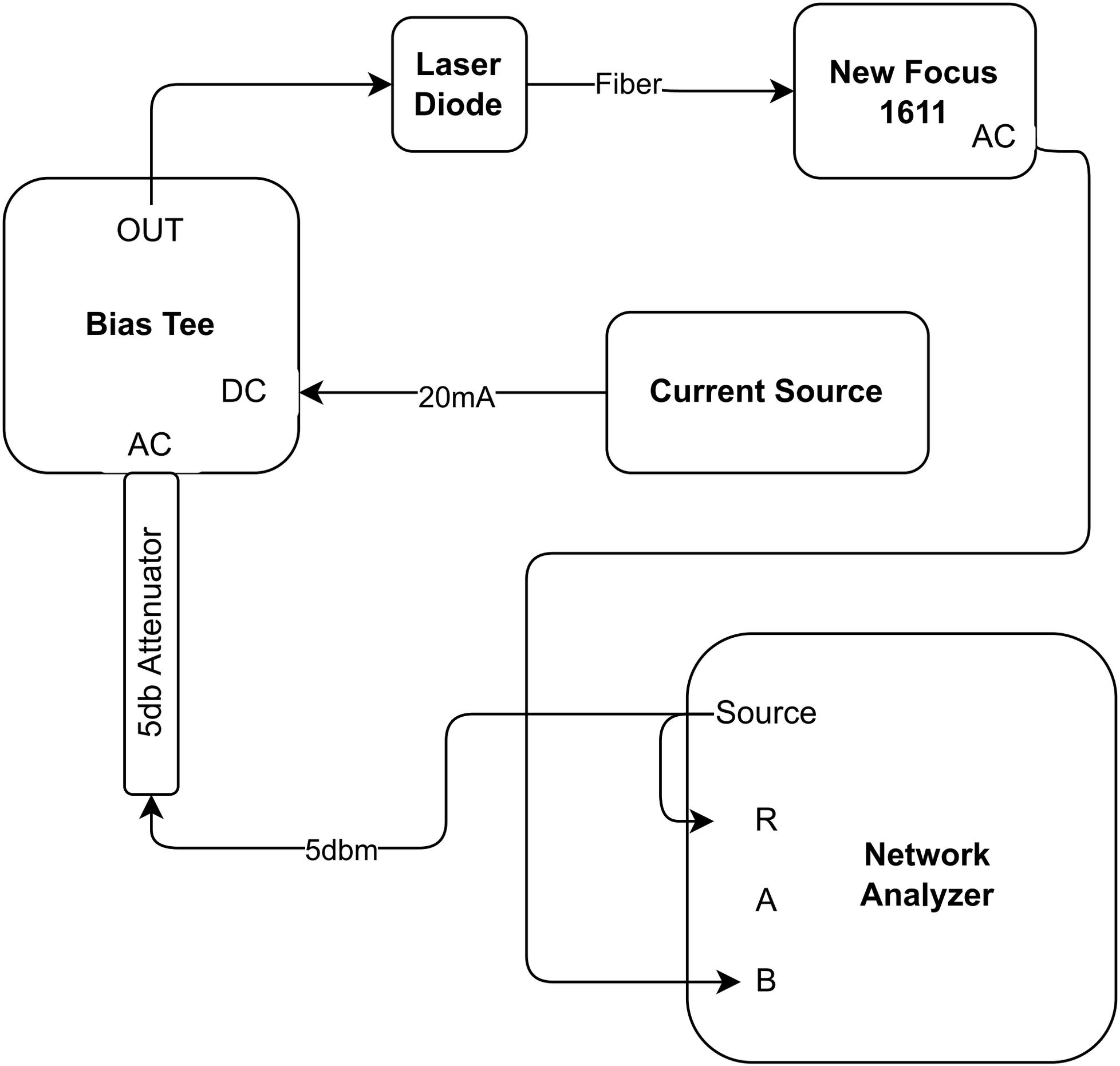
Laser Diode
Fiber
New Focus 1611
AC
OUT
Bias Tee
DC
AC
20mA
Current Source
5db Attenuator
5dbm
Source
R
A
B
Network Analyzer