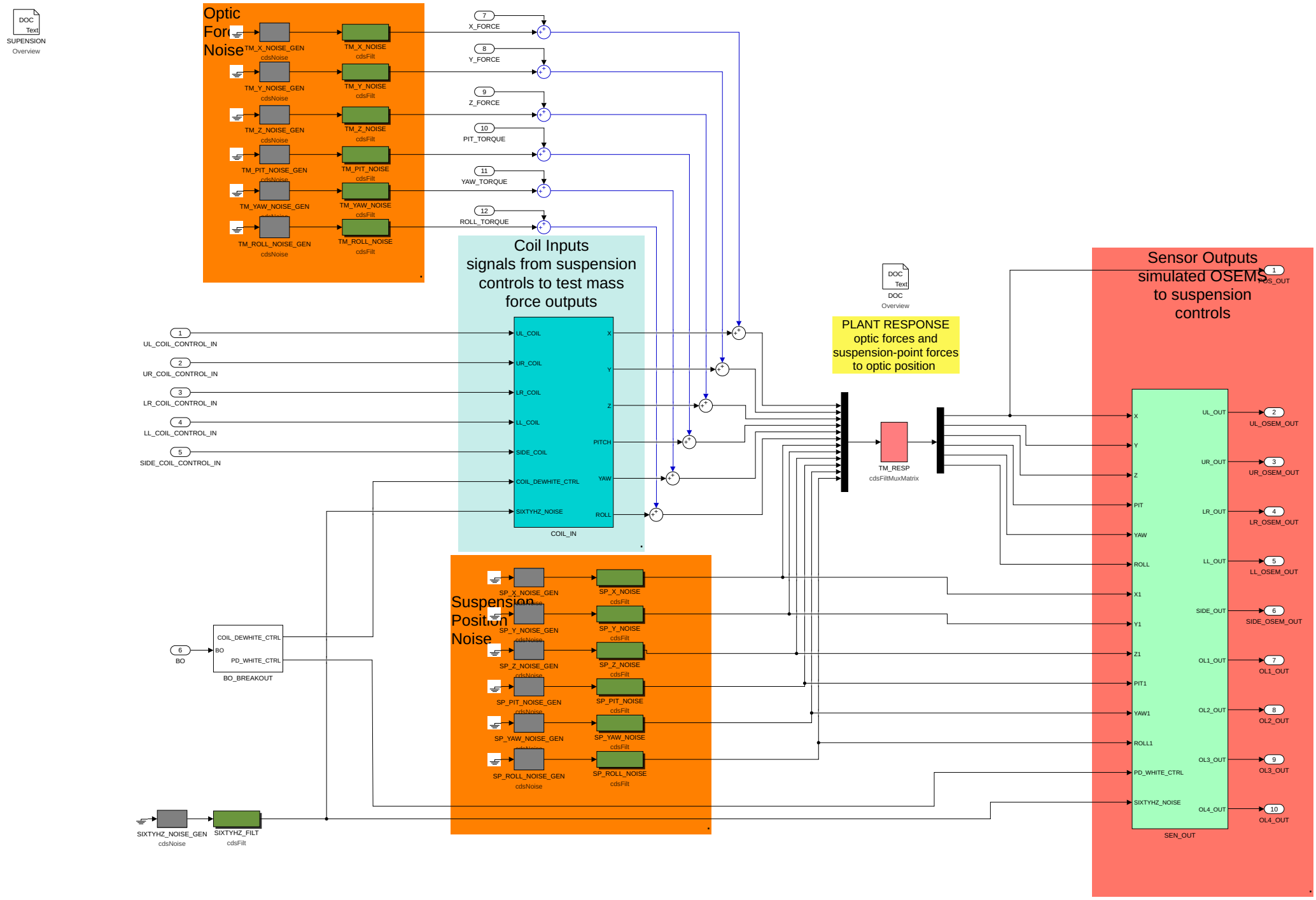
SUPENSION
Overview
Optic Force Noise
TM_X_NOISE_GEN
cdsNoise
TM_X_NOISE
cdsFilt
TM_Y_NOISE_GEN
TM_Y_NOISE
TM_Z_NOISE_GEN
TM_Z_NOISE
TM_PIT_NOISE_GEN
TM_PIT_NOISE
TM_YAW_NOISE_GEN
TM_YAW_NOISE
TM_ROLL_NOISE_GEN
TM_ROLL_NOISE
7 X_FORCE
8 Y_FORCE
9 Z_FORCE
10 PIT_TORQUE
11 YAW_TORQUE
12 ROLL_TORQUE
Coil Inputs
signals from suspension controls to test mass force outputs
1 UL_COIL_CONTROL_IN
2 UR_COIL_CONTROL_IN
3 LR_COIL_CONTROL_IN
4 LL_COIL_CONTROL_IN
5 SIDE_COIL_CONTROL_IN
UL_COIL
UR_COIL
LR_COIL
LL_COIL
SIDE_COIL
COIL_DEWHITE_CTRL
SIXTYHZ_NOISE
X
Y
Z
PITCH
YAW
ROLL
COIL_IN
DOC
Text
DOC
Overview
PLANT RESPONSE
optic forces and suspension-point forces to optic position
TM_RESP
cdsFiltMuxMatrix
Sensor Outputs
simulated OSEMS to suspension controls
1 POS_OUT
X
Y
Z
PIT
YAW
ROLL
X1
Y1
Z1
PIT1
YAW1
ROLL1
PD_WHITE_CTRL
SIXTYHZ_NOISE
UL_OUT
UR_OUT
LR_OUT
LL_OUT
SIDE_OUT
OL1_OUT
OL2_OUT
OL3_OUT
OL4_OUT
SEN_OUT
2 UL_OSEM_OUT
3 UR_OSEM_OUT
4 LR_OSEM_OUT
5 LL_OSEM_OUT
6 SIDE_OSEM_OUT
7 OL1_OUT
8 OL2_OUT
9 OL3_OUT
10 OL4_OUT
Suspension Position Noise
SP_X_NOISE_GEN
SP_X_NOISE
SP_Y_NOISE_GEN
SP_Y_NOISE
SP_Z_NOISE_GEN
SP_Z_NOISE
SP_PIT_NOISE_GEN
SP_PIT_NOISE
SP_YAW_NOISE_GEN
SP_YAW_NOISE
SP_ROLL_NOISE_GEN
SP_ROLL_NOISE
6 BO
COIL_DEWHITE_CTRL
BO
PD_WHITE_CTRL
BO_BREAKOUT
SIXTYHZ_NOISE_GEN
SIXTYHZ_FILT