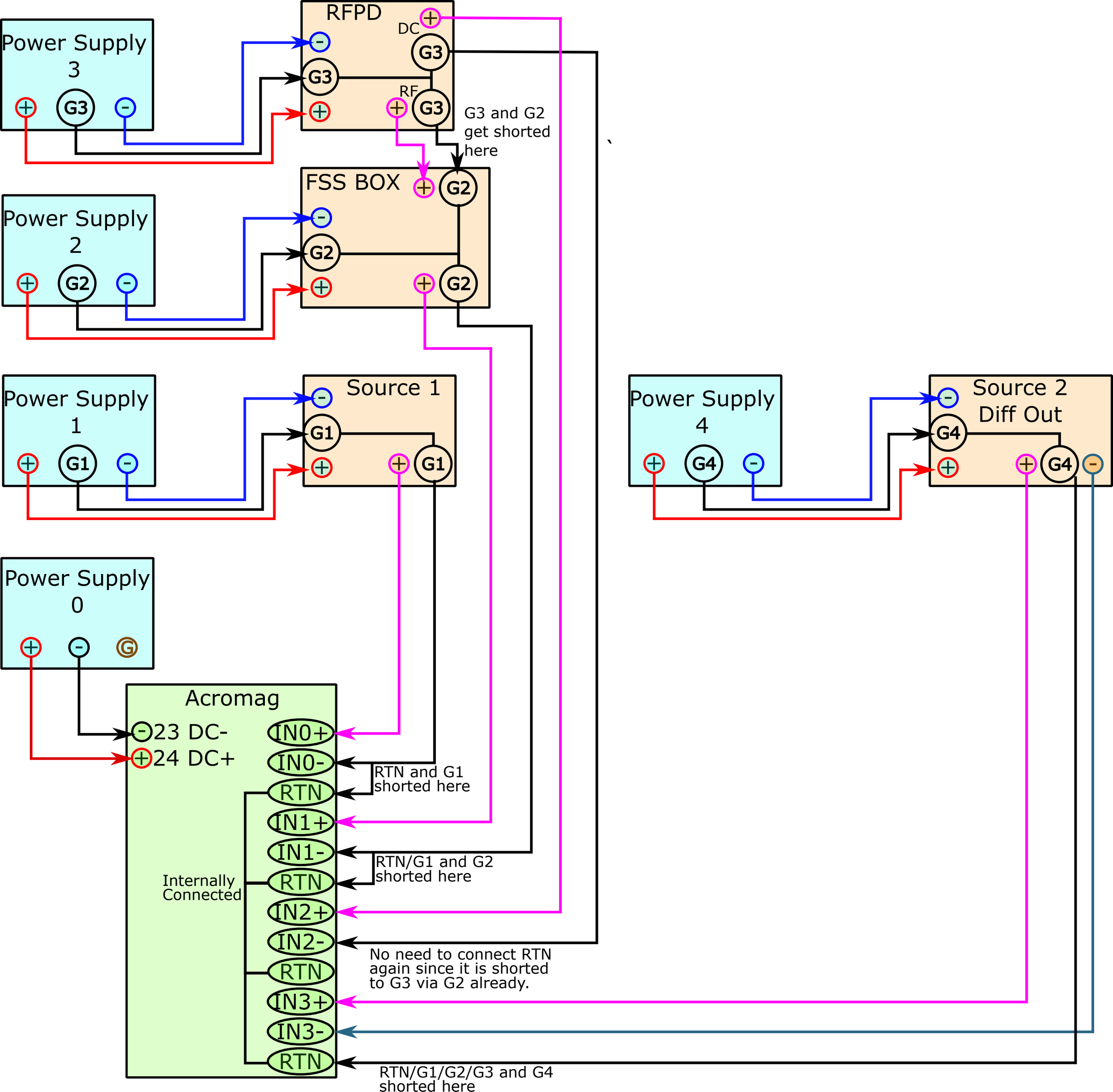
RFPD
DC
G3
RF
G3 and G2 get shorted here
Power Supply 3
FSS BOX
G2
Power Supply 2
Source 1
G1
Power Supply 1
Power Supply 4
Source 2 Diff Out
G4
Power Supply 0
Acromag
23 DC-
24 DC+
IN0+
IN0-
RTN
IN1+
IN1-
IN2+
IN2-
IN3+
IN3-
Internally Connected
RTN and G1 shorted here
RTN/G1 and G2 shorted here
No need to connect RTN again since it is shorted to G3 via G2 already.
RTN/G1/G2/G3 and G4 shorted here