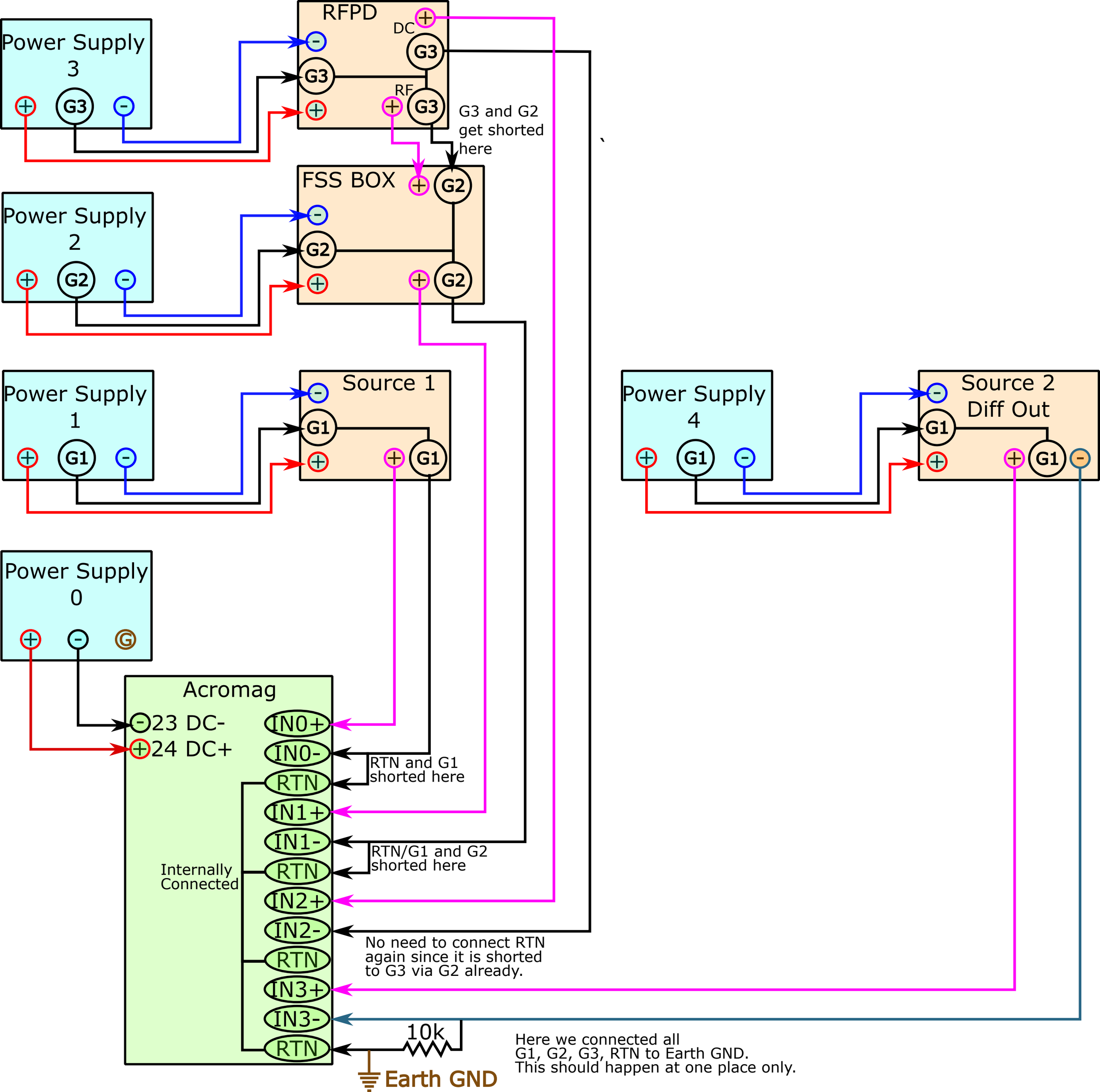
RFPD
DC
G3
RF
G3 and G2 get shorted here
Power Supply 3
FSS BOX
G2
Power Supply 2
Source 1
G1
Power Supply 1
Power Supply 4
Source 2 Diff Out
Power Supply 0
Acromag
23 DC-
24 DC+
IN0+
IN0-
RTN
IN1+
IN1-
IN2+
IN2-
IN3+
IN3-
RTN and G1 shorted here
RTN/G1 and G2 shorted here
Internally Connected
No need to connect RTN again since it is shorted to G3 via G2 already.
10k
Earth GND
Here we connected all G1, G2, G3, RTN to Earth GND. This should happen at one place only.