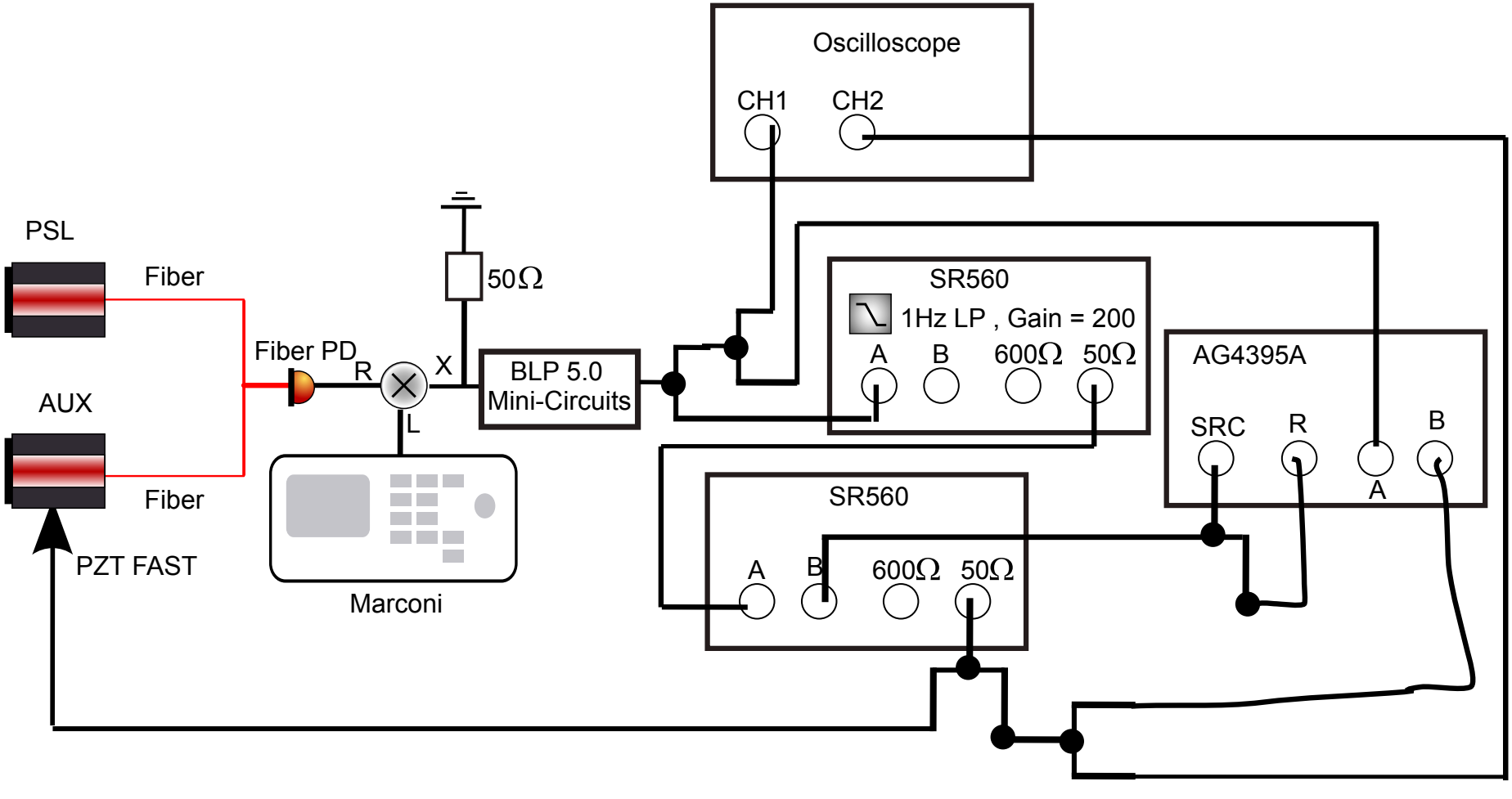
Oscilloscope
CH1
CH2
PSL
Fiber
AUX
Fiber
PZT FAST
Fiber PD
R
X
L
50Ω
BLP 5.0
Mini-Circuits
Marconi
SR560
1Hz LP , Gain = 200
A
B
600Ω
50Ω
AG4395A
SRC
R
A
B
SR560
A
B
600Ω
50Ω