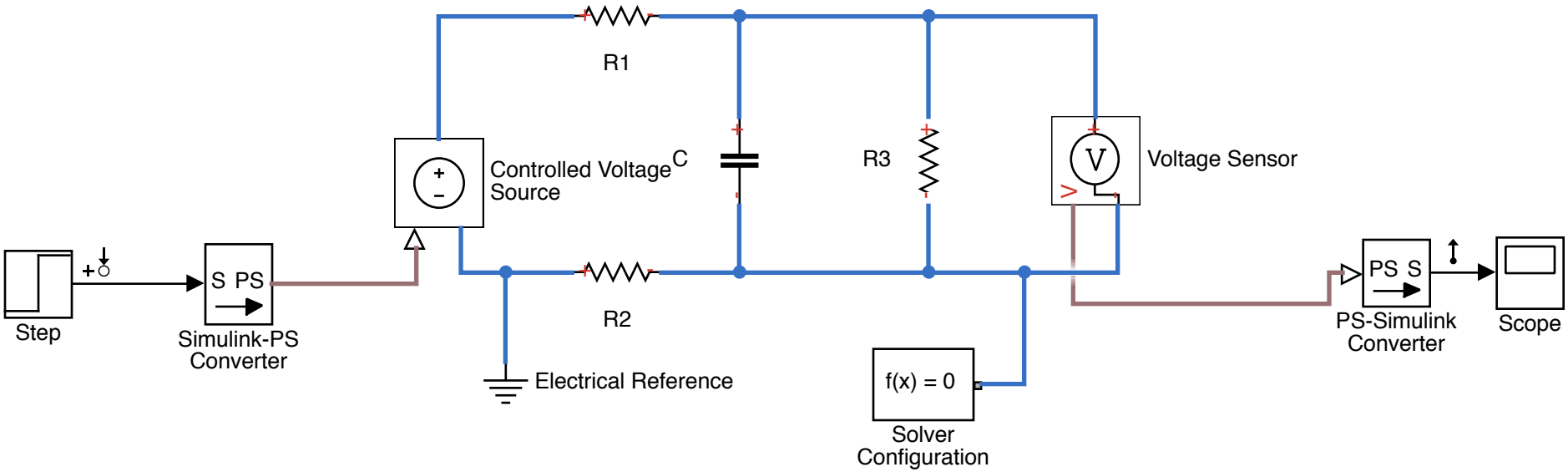
R1
Controlled Voltage Source
C
R3
Voltage Sensor
Step
S PS
Simulink-PS Converter
R2
Electrical Reference
f(x) = 0
Solver Configuration
PS S
PS-Simulink Converter
Scope