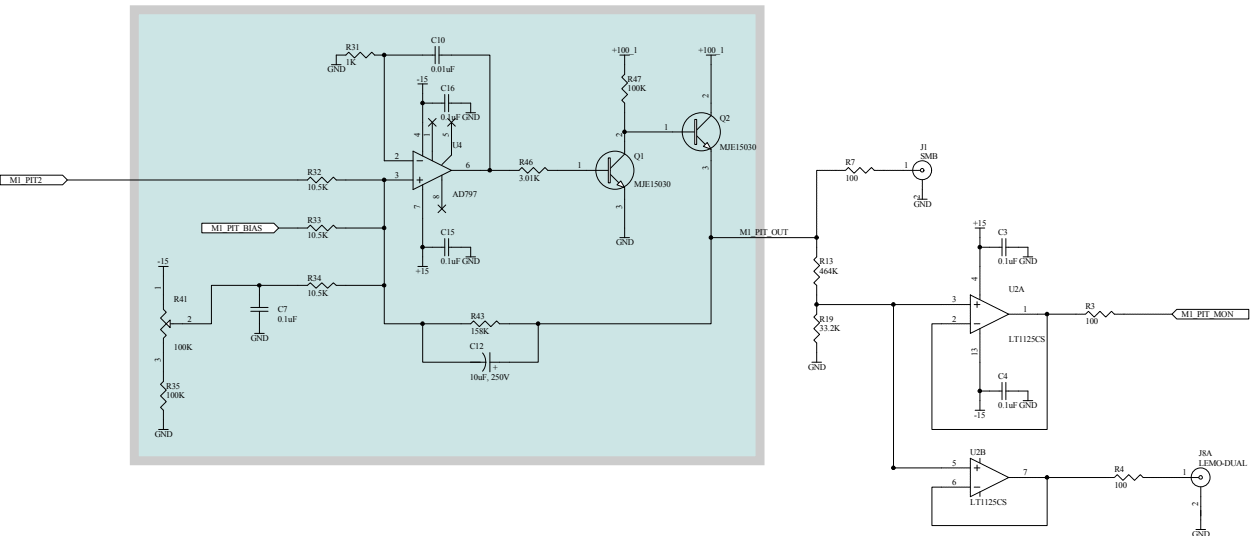
M1_PIT2
R31
1K
GND
C10
0.01uF
-15
C16
0.1uF
GND
U4
AD797
R32
10.5K
M1_PIT_BIAS
R33
10.5K
C15
0.1uF
GND
+15
R34
10.5K
R41
100K
C7
0.1uF
GND
R35
100K
GND
R43
158K
C12
10uF, 250V
R46
3.01K
+100_1
R47
100K
Q1
MJE15030
GND
Q2
MJE15030
M1_PIT_OUT
R7
100
J1
SMB
GND
R13
464K
R19
33.2K
GND
C3
0.1uF
GND
U2A
LT1125CS
C4
0.1uF
GND
R3
100
M1_PIT_MON
U2B
LT1125CS
R4
100
J8A
LEMO-DUAL
GND