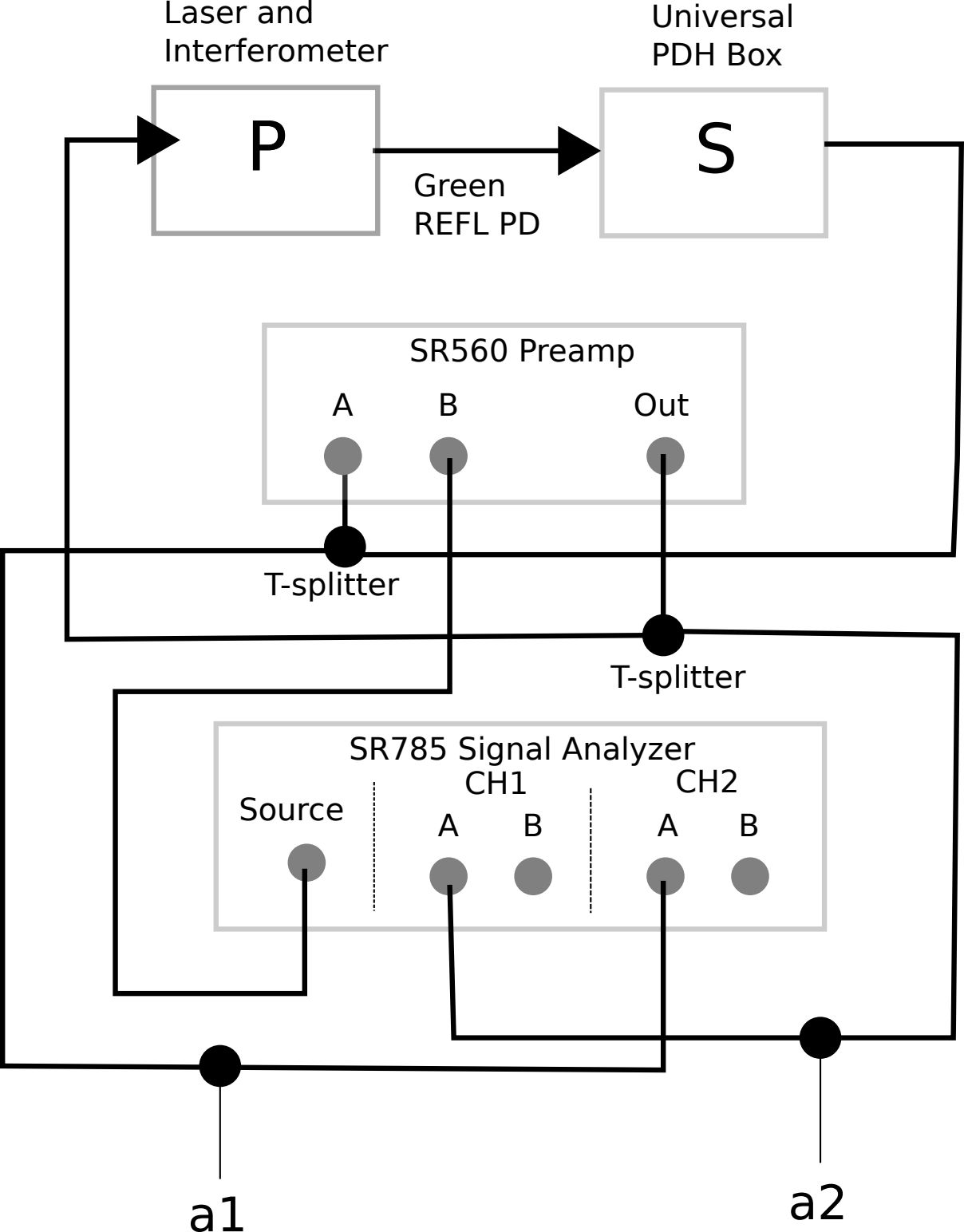
Laser and
Interferometer
Universal
PDH Box
P
S
Green
REFL PD
SR560 Preamp
A
B
Out
T-splitter
T-splitter
SR785 Signal Analyzer
CH1
CH2
Source
A
B
A
B
a1
a2