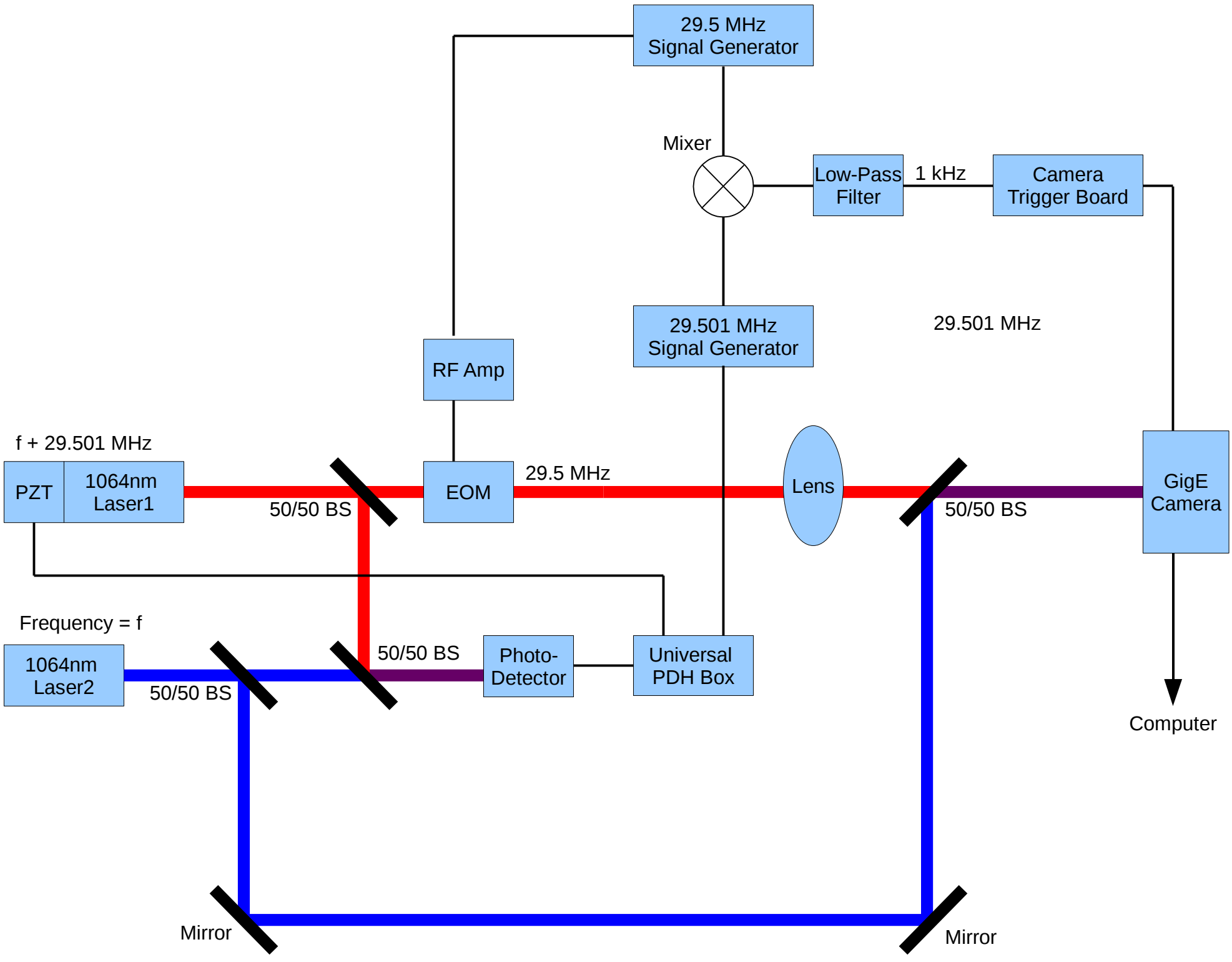
29.5 MHz
Signal Generator
Mixer
Low-Pass
Filter
1 kHz
Camera
Trigger Board
29.501 MHz
Signal Generator
29.501 MHz
RF Amp
f + 29.501 MHz
PZT
1064nm
Laser1
50/50 BS
EOM
29.5 MHz
Lens
50/50 BS
GigE
Camera
Frequency = f
1064nm
Laser2
50/50 BS
50/50 BS
Photo-
Detector
Universal
PDH Box
Computer
Mirror
Mirror